# ALTERNATIVES FOR INTERCONNECTION OF PUBLIC PACKET SWITCHING DATA NETWORKS

Vic DiCiccio
CCNG
Univ. of Waterloo
Waterloo, Ontario

Carl A. Sunshine
Univ. of Southern California
Information Sciences Inst.
Marina del Ray, CA 90291

James A. Field  Eric G. Manning
Computer Communications Networks Group
University of Waterloo
Waterloo, Ontario

## Summary

CCITT has proposed Recommendation X.75 as a technique for interconnecting public data networks in a standard way. However, this is not the only or necessarily the best approach. This paper focuses on two major factors in determining the merits of different network interconnection approaches, and compares the X.75 approach to a few alternatives in each of these areas.

One of the determining factors for interconnection is the willingness of each network to cooperate. X.75 requires a high degree of cooperation and uniformity of each network's operations. Other solutions such as a "subscriber gateway" which is interfaced as a subscriber on both networks may be possible when networks are not as compatible or cooperative.

Another determining factor in interconnection is the degree of gateway participation in providing various levels of end-to-end service, such as virtual circuit and terminal handling services. The gateway may fully participate in and "terminate" the protocol for a given service, or may not participate in the protocol at all. The former leads to a stepwise implementation of an end-to-end service while the latter results in an endpoint approach. CCITT has chosen a largely terminating approach for virtual call service, but an endpoint approach for terminal handling. The degree of participation is examined for three alternatives: the X.75 gateway, the subscriber gateway and the datagram gateway.

## 1. Introduction

Packet switching public data networks offering virtual call service are currently operational or under construction in many countries. As the user acceptance of these networks increases, and the number of active users grows, there is an increase in the users' demand for network interconnection to extend the communications services across national boundaries[1,2]. Interconnection among domestic networks in countries with multiple public networks (such as the USA and Canada) is also desirable from a user viewpoint.

The entity providing an interface between data networks is typically called a "gateway"[1]. The gateway may be a single processor connected to both nets, or may be split into "gateway halves" in each net. These gateway halves may be independent processors or extensions of the ordinary switching nodes of the network, as is the case with the signalling terminals (STEs) of public networks.

The International Telephone and Telegraph Consultative Committee (CCITT) has adopted a number of international standards for various public data network interfaces. These include X.25[3], a subscriber interface for packet-mode data terminal equipment (DTE), X.3, X.28 and X.29[4], which are protocols for start-stop mode terminal handling, and X.75[5], an interface for network interconnection. Furthermore, an international numbering plan, X.121[6], which defines international addressing based on a hierarchical concept, has been adopted. These standards imply a strategy for the provision of international service. Virtual call service for packet-mode DTEs will be provided in an essentially "stepwise" fashion, by the concatenation of virtual calls in each network (we will refer to these as "virtual call segments") through the use of an X.75 interface. This forms the basic level of service upon which the terminal handling protocols depend. The higher level terminal handling protocol, X.29, is to be implemented at both ends of the international virtual call; the intent is that the gateway should be transparent to this protocol. Hence, the terminal handling service is of the "endpoint" type[1].

There are a number of limitations in the CCITT standards when they are viewed as a complete internetworking plan. Foremost is that, although they specify the protocols and hence the interfaces in detail, it is not within the CCITT's mandate to define the operation of virtual calls within the networks' own environments. Since virtual calls are implemented in different ways in various networks through the use of different internal procedures, each network may use any available flexibility in the interpretation of the standards to provide a somewhat different service. Hence the service resulting from the concatenation of virtual circuits in several nets may vary, depending on the nets, and there may even be incompatibilities or features offered in some nets but not in others.

Another limitation of the CCITT standards is that they do not specifically address such issues as accounting, routing, congestion control, failure reporting, etc. In fact, much of the overall gateway architecture must be inferred from the X.75 standard.

In this paper, we will present some alternatives to the CCITT interconnection approach. Although these alternatives are not new, we wish to compare them to X.75 in the light of two important factors in the provision of network interconnection: the amount of cooperation or level of effort required on the part of network administrations to achieve interconnection, and the level of gateway participation required to provide a usable interface between network protocols.

## 2. Administration Cooperation and Level of Effort

There is a wide spectrum of alternatives with respect to the amount of change to local net operations that is required for net interconnection. At one extreme, interconnection at the packet switch level is very costly due to the high degree of heterogeneity among network's internal protocols*.[1] If interconnection were based on this technique, the amount of local net alteration required to adopt a standard subnetwork implementation would be prohibitively high.

A second approach, which requires only moderate change to local net operations, is the provision of interconnection based on X.75. In this approach each network must map its own internal virtual call signalling into X.75 procedures at its gateway half (STE). The end-to-end service as perceived by the users depends upon the degree of success of this mapping in both networks. If a certain element of the internal protocol which supports a particular feature offered to the subscriber cannot be mapped into X.75, then that feature will not be available for use between subscribers on different networks. Hence, interconnection using X.75 requires the cooperation of network administrations and some sacrifice of local network independence to ensure that:

1. each net's internal protocol is mapped into X.75 at the net's gateway half.

2. standard subscriber interface functions are provided globally among networks. Examples of such functions are reverse charging and priority levels for calls or data. These functions may be provided by different protocol procedures on different nets, since this can be handled to some degree by gateway translations. However, there must be commonality of subscriber protocol functions among all interconnected networks.

*Internal protocols refer to any switch-to-switch protocols or end-to-end protocols used at the subnet level to support virtual calls between subscribers on a single network.

A third approach for network interconnection is to use a common subscriber on a pair of networks as a gateway. This approach requires only a very low degree of change to local net operations. Internetwork virtual call service is then based upon the concatenation of two virtual calls, one in each public data network (PDN), at the gateway. The problem of heterogeneous internal protocols is avoided, since this "subscriber gateway" is a host level interconnection, as is X.75. Since the gateway processor is available to perform translations between the two networks' subscriber access protocols, this gateway is technically possible between any pair of PDNs. However, the degree of homogeneity between the two networks' access protocols (e.g. X.25) influences the amount of protocol translation required at the gateway.

The subscriber gateway approach has several advantages over interconnection based on X.75. Foremost is that the level of effort required on the part of the network administrations is much lower than is required for X.75. This was an important factor in the decision to use a subscriber gateway initially for the interconnection of Datapac and Telenet and also Tymnet and Datapac[7].

Adoption of X.75 and X.121 requires that each network administration spend a considerable amount of time and money in developing STEs grafted on to data switching exchanges (DSEs), and also in modifying their DSEs to accept the X.121 internetwork hierarchical addresses. The subscriber gateway requires much less development effort and no global network alterations. Addressing may be performed using a two-step technique where the user first sets up a call to the subscriber gateway, then gives it the destination address on the other network. If a number of transit networks are involved, the user may have to address a succession of gateways before the destination network is reached. As an alternative, the destination address could also be placed in the call user data field of the call request packet so that the gateway appears transparent to the user. Either of these techniques eliminates the need for changes to the current PDN DSEs to accommodate internetwork addressing and routing.

Since subscriber gateways are easier to develop, many network administrations may wish to use them as a temporary measure until they develop STEs, or they may wish to delay the development of STEs until the X.75 protocol has finished evolving and is fully defined. The subscriber gateway also allows the network administration to gather some valuable interworking experience, particularly in the areas of accounting and charging, at a relatively low cost, before installing a permanent gateway based on X.75.

Since the subscriber gateway is based upon subscriber protocols and does not require any modifications to, or knowledge of, the internal protocols of either network, it could be useful in situations where network administrations wish to

devote a minimum amount of effort to the provision of interconnection. Although some regulatory and legal difficulties may ensue, one could imagine a "third party" (neither of the network administrations) developing and implementing the subscriber gateway; in this way only a very low degree of cooperation is required on the part of the network administrations.

The subscriber gateway does have a number of disadvantages in comparison to interconnection based on the CCITT standards. If the network administrations do not wish to modify their data switching nodes to accommodate internetwork addressing, then user source routing is indicated and the two-step addressing technique described earlier must be used. In addition, such a gateway would not be transparent to the user.

Because the gateway must act as the termination point for two virtual calls, and maintain status information on each individual internetwork call, there can be no alternate gateway routing or recovery from gateway failure within an internetwork call. (This is also characteristic of the X.75 approach.)

If the gateway is provided by a third party, the internetwork accounting and billing cannot be integrated with the accounting and billing for local net. Hence, the user will receive multiple bills. The gateway will also have to absorb the charges for any reverse charge calls originated in the first net which were not completed in the second net.

The transmission speed of the lines used between the gateway and either network is limited to the maximum access link speed available to subscribers (this is 9.6 Kbps for most networks, although this maximum will increase in the near future on some networks ). In comparison, X.75 STEs would use 56 Kbps network trunks to connect to the network and between each other. Therefore, the subscriber gateway has a higher transmission delay or conversely, can handle fewer internetwork calls at the same maximum delay. In practice, this should only be a problem when the amount of internetwork traffic is high and, therefore, should not diminish the value of the subscriber gateway as a tool for network administrations to gain expertise at low cost with network interconnection.

## 3. Degree of Gateway Participation

Internetwork services are frequently characterized as being provided in either a "stepwise" or an "endpoint" fashion. In the stepwise approach, the total internetwork service is provided by concatenating, at the gateway, the appropriate service in each network. For example, X.75 dictates that internetwork virtual calls be provided in a stepwise fashion by concatenating the virtual call service available in each network. However, at a higher level, the packet assembly/disassembly (PAD) protocol X.29 provides terminal handling capabilities based on an endpoint approach where the X.29 protocol is implemented at the PAD and at the remote host. In an internetwork context, the gateway should not even be aware of the X.29 protocol contained within the X.25 data packets.

Unfortunately, in practice it becomes difficult to classify the provision of services as purely endpoint or stepwise; many intermediate cases may be seen. For instance, in the terminal handling example, if two interconnected networks have slightly different versions or interpretations of the CCITT X.29 standard, it may become necessary to perform some translations between the two versions at the gateway. Although these translations may be simple, it now becomes difficult to define the resultant terminal handling service as either purely endpoint or purely stepwise.

As an aid to a more precise classification scheme, we have adopted the concept of the degree of gateway "participation" in a protocol level. Three levels of participation may be distinguished:

1. the gateway terminates certain elements of the protocol, or

2. the gateway translates certain elements of the protocol into elements of another protocol, or

3. the gateway is transparent to certain elements of the protocol.

Although both termination and translation involve some gateway processing, these definitions can be applied quite easily to a number of situations. For example, in the situation described above where two interconnected networks have slightly different versions of X.29, the gateway would participate at the terminal handling level by performing translations between the two versions. However, if the versions were identical except that one network omitted all the Break handling procedures, then the gateway would terminate that aspect of the protocol and be transparent to the rest.

At the virtual circuit level, gateways may have to translate packet formats (e.g. from internal to X.75), or even to fragment a packet into several smaller fragments. For flow control, the gateway might terminate the protocol (advance the window) on its own, or simply pass along remote window advances transparently, or perhaps even translate one unit of flow control into two units in the next net.

It is instructive to examine a few different gateway architectures to determine the degree of participation of the gateway in the protocols involved at various levels of service.

### 3.1 The X.75 Gateway

As mentioned previously, the CCITT interconnection strategy based on X.75 requires gateway participation at the virtual call level. Figure 1

shows the virtual call segments required between two subscribers on two networks which are interconnected using X.75. Each STE terminates the internal protocol which is used on its own network to support the virtual call service; this effectively terminates the virtual call in each network. The STEs use X.75 between themselves to provide internetwork virtual call segments, therefore they also terminate the X.75 protocol. However, most elements of the internal call protocol in each network should be directly translatable into X.75 elements. Some incompatibilities may have to be terminated, such as reverse charging. Other elements such as the Q bit in X.25 could be handled transparently since they have meaning only to the subscriber, but X.75 mandates their checking at the gateway.

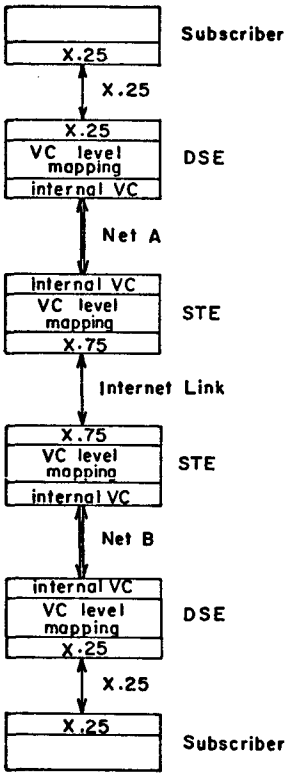


Figure 1: Network Interconnection Based on X.75 (Five VC Segments).

Terminal handling (for start-stop mode DTEs) is provided on an endpoint basis using the PAD protocols described in Recommendations X.3, X.28 and X.29. X.29 is the protocol used on the internetwork portion of the call, between the PAD and the remote host. If two interconnected networks use identical versions of X.29, then the gateway should be fully transparent to the protocol and the terminal handling service is provided on a purely endpoint basis. However, if the version of X.29 in the PAD differs somewhat from the version in the host, there are two options available:

1. The remote host could implement two versions of X.29; one for communicating with PADS on its local net and the other for PADs on the remote net. When generalized to several interconnected networks, this solution may require the host to keep a prohibitively large number of X.29 implementations.

2. The gateway could translate and possibly terminate the mismatched elements of the two X.29 protocol as in the Break example given above. Hence the gateway is participating in the provision of terminal handling service. However, it may not be simple to decide in which network administration's STE the translations should be performed.

## 3.2 The Subscriber Gateway

The degree of participation of the subscriber gateway is similar to that of the X.75 gateway. The subscriber gateway can terminate the subscriber network access protocol, which is usually X.25, on both sides of the interconnection as shown in Figure 2. This has the effect of isolating the two networks from each other to a very high degree. If the two networks have identical subscriber network access protocols, it may be possible for the gateway to perform in a purely translational manner.

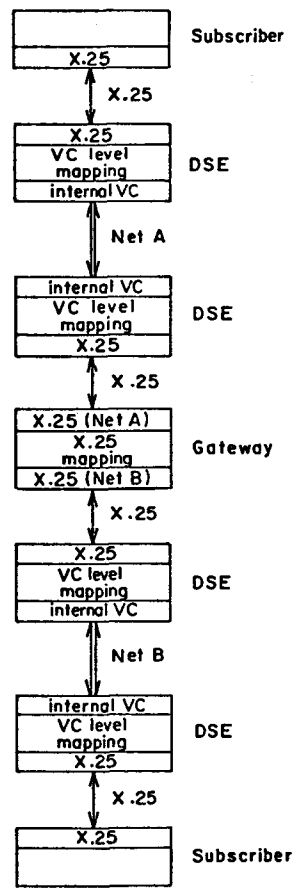


Figure 2: Network Interconnect Based on the Subscriber Gateway (Six VC Segments).

The considerations involved in providing terminal handling service across the subscriber gateway are identical to those for the X.75 gateway except that, should any X.29 translation be required, there is only one gateway processor in which to implement it.

### 3.3 The Datagram Gateways

If both networks offer datagram service to subscribers, a third gateway possibility emerges: a gateway which interconnects at the datagram service level (Figure 3). Internetwork virtual calls could then be provided on an end-point basis using end-to-end protocols implemented in either the subscriber hosts or the DSEs[8]. The major advantages of this approach over the X.75 and subscriber gateways are decreased gateway cost and complexity, and an improvement in the quality of user-to-user service.

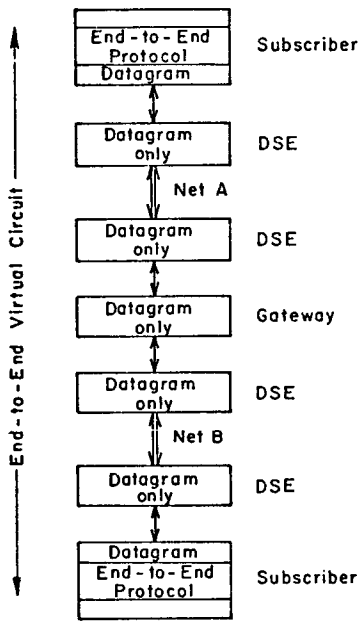


Figure 3: Datagram Network Interconnection (One VC Segment).

The decrease in gateway complexity results from the requirement that the gateway need participate only at the datagram level. It will be transparent to the virtual call and terminal handling levels since identical versions of the protocols at these levels will be implemented at both the source and destination ends of the call.

The improvement in the quality of user-to-user service arises from both the potential for alternate routing when using datagram gateways and the ability of the end-to-end protocol to detect failures along the path of the virtual call. Alternate routing through various gateways within a single call is not possible using either the X.75 or subscriber gateways, since those gateways participate at the virtual call level and therefore must retain status information for every call throughout the call's duration. However, a datagram gateway needs no call status information so datagrams from a single call may pass through different gateways. This permits the use of alternate gateways in case of failure without having to clear and re-establish the call. Table I compares the three different gateway approaches in terms of their ability to maintain reliable end-to-end service despite failures at various points along the virtual call path. The use of an end-to-end protocol above X.25 for networks interconnected by X.75 or subscriber gateways would also be beneficial. However, some elements of the X.25 and X.75 protocol would become redundant.

Table I: A Comparison of the Ability to Maintain Reliable Virtual Call Service After Failures at Various Points Along a Virtual Call Path.

| Type of Failure | Detection and Reliable Recovery Using: | | | |
|---|---|---|---|---|
| | X.75 Gateway and X.25 Subscriber Protocol | Subscriber Gateway and X.25 Subscriber Protocol | Datagram Gateway and End-to-End Protocol | |
| | | | in hosts | in DSEs |
| source or destination DSE fails | no | no | yes | no |
| internal net node fails | possibly | possibly | yes | yes |
| internal net link fails | yes | yes | yes | yes |
| gateway fails | no | no | yes | yes |
| internetwork link fails (no alternate link) | no | no | yes | yes |
| source or destination host fails | no | no | no | no |

The datagram gateway has some disadvantages relative to the other two types. Foremost is that a common source-destination (end-to-end) protocol must be chosen and implemented. Obtaining a truly identical implementation may be difficult when more than one user or network administration is involved, particularly if the protocol specifications are provided only in natural language with its attendant ambiguities and lack of precision. One common objection to the interconnection of datagram services in general is that congestion control is more difficult because datagrams can follow various paths through the network. This does not occur with concatenated virtual calls, since flow control on a per call basis exists at a number of points along the call path, including

the gateway. However, other congestion control techniques are available for use in datagram nets[8].

Another common objection to datagram gateways pertains to accounting. The X.75 and subscriber gateways can gather accounting statistics on a per call basis. However, this is impossible for the datagram gateway, since its only information is the source and destination addresses contained in each packet. One solution is for the gateway to collect accounting information for each source-destination pair. This information must then be retrieved from each gateway on a fairly long term basis by a network control centre, where subscriber bills can be calculated and statistics on packets entering into or received from other networks can be prepared.

Addressing is not a large problem for datagram gateways. Some form of hierarchical addressing, such as X.121, should be used in the header of every datagram. Each network node must be able to route datagrams based on the network terminal number (or subscriber address) for subscribers on the node's own network, and also based on the data network identification code (or network address) for subscribers on another network. This is very similar to the routing performed by a DSE in the case of X.25 nets interconnected by X.75 or subscriber gateways.

## 4. Conclusions

Subscriber gateways provide a viable means for the interconnection of networks with a minimum of effort and involvement by network administrations. However, their use imposes certain inconveniences on the users, and legal or administrative difficulties may preclude their use. Hence this means of interconnection is likely to be used only as a temporary measure until X.75 interfaces are developed, or in a world where interconnection is more open to competition and innovation than has heretofore been the case.

The degree of gateway participation in the provision of internetwork service appears to be highly related to the cost of providing that service. Datagram gateways with a minimum of functions to perform may yield a more reliable and less costly internetwork system. In X.75 interconnection, the gateway must participate in virtual call functions, but is intended to be transparent to the X.29 terminal handling protocol. However, incompatibilities in X.29 in different nets may require STEs to participate in patching up these differences for internet calls.

## References


1. Sunshine, C.A., "Interconnection of Computer Networks," Computer Networks, Vol. 1, pp. 175-195, January 1977.

2. Cerf, V.G., and Kirstein, P.T., "Issues in Packet-Network Interconnection," Proc. IEEE, Vol. 66, pp. 1386-1408, Nov. 1978.

3. CCITT Recommendation X.25, "Interface between data terminal equipment (DTE) and data circuit terminating equipment (DCE) for terminals operating in the packet mode on public packet networks," Geneva, 1977.

4. CCITT Provisional Recommendations X.3, "Packet assembly/disassembly facility (PAD) in a public data network"; X.28, "DCE/DTE interface for a start-stop mode data terminal equipment accessing the packet assembly/disassembly facility (PAD) in a public data network situated in the same country"; and X.29, "Procedures for the exchange of control information and user data between a packet-mode DTE and a packet assembly/disassembly facility (PAD)," Geneva, 1977.

5. CCITT Recommendation X.75, "Terminal and transit call control procedures and data transfer system on international circuits between packet switched data networks," Geneva, 1978.

6. CCITT Recommendation X.121, "International numbering plan for public data networks," Geneva, 1978.

7. Rybczynski, A.M., Weir, D.F., and Cunningham, I.M., "Datapac Internetworking For International Services," Proceedings of the Fourth International Conference on Computer Communication, Kyoto, Japan, pp. 47-56, September 1978.

8. Grossman, G.G., Hinchley, A., and Sunshine, C.A., "Issues in International Public Data Networking," accepted for publication in Computer Networks.