NP-hardness of some map labeling problems

Claudia Iturriaga*
Anna Lubiw †
Dept. of Computer Science
University of Waterloo
CS-97-18

Abstract

One of the most challenging tasks of cartographic map lettering is the optimal placement of the region information on a map. We show the NP-hardness of two formulations of this task: the *elastic labelling problem* and *sliding labels problem*. In the elastic labelling problem we are given a set of *elastic rectangles* as labels, each associated with a point in the plane. An elastic rectangle has a specified area but its width and height may vary. The problem then is to choose the height and width of each label, and the corner of the label to place at the associated point, so that no two labels overlap. This problem is known to be NP-hard even when there is no elasticity (just because of the choice of the corners). We show that the problem remains NP-hard when we have elasticity but no choice about which corner of the label to use—we call this the *one-corner elastic labelling problem*. In the sliding labels problem each label has fixed dimension but any boundary point (not just a corner) of the label can be placed at the associated point in the plane. This problem is known to be NP-hard. We show that it remains NP-hard when only points on the left or right boundary of the label can be placed at the associated point —we call this the *left-right sliding labels problem*. A companion paper will give algorithms for special cases of the elastic labelling problem and the sliding labels problem.

*email: cciturri@barrow.uwaterloo.ca
†email: alubiw@daisy.uwaterloo.ca. Research partially supported by NSERC

1 Introduction

One of the necessary tasks to achieve in Cartography is the placement of information on a map. In [Imh75] we can find a set of rules for how a region should be labelled to agree with its geographical characteristics. In this report we focus on the actual placement of information on a map. In particular, we study the case when we must label points.

One formulation of the label placement problem is the *point-feature-label placement problem* of [FWa91], [KIm88], [KRa92], and [MSh91], where we are given a set of points in the plane and with each point an associated axis-parallel rectangular label. The problem is to place the labels so that they do not overlap, and so that each label has one of its corners at its associated point. This problem is known to be NP-complete [FWa91], [KIm88], [KRa92] and [MSh91] and we can find heuristics in [CMS95], [FWa91] and [WWo97].

In this report we study the *elastic labelling problem* as described in the abstract. This problem generalizes the above point-feature-label placement problem in that we are free to choose the height and width of each rectangular label as long as we achieve the specified area. This problem is useful when the goal of placing a label at a given point is to associate some text (more than one word) with the point. In this case we are able to write the specified text inside the label by using one, two, or more rows, as long as the label is placed at the specified point. It is clear that the elastic labelling problem is NP-hard since it generalizes the point-feature-label placement problem. We show that even the *one-corner elastic labelling problem*—in which we fix the corner of each label that must be placed at the point—is NP-hard. In [ILu97] we give a polynomial algorithm for the one corner problem when the points lie on the x and y axes and rectangles are to be placed in the first quadrant.

As well, we study the *sliding labels problem*, which generalizes the point-feature-label placement problem in that any point of the boundary of the label, not just the corners, can be placed at the associated point. This problem is known to be NP-complete [MSh91]. We show the NP-hardness of the special case in which only points on the left or right side of the label can be placed at the associated point—this is called the *left-right sliding labels problem.*

2 Elastic labelling problem

We define an orthogonal rectangle R by a quadruple (x, y, x', y') where the pair (x, y) sets the coordinates of the bottom left corner and the pair (x', y') sets the coordinates of the upper right corner. For a rectangle R we define $left(R) = x$, $bottom(R) = y$, $right(R) = x'$, $top(R) = y'$, $height(R) = y' - y$, and $width(R) = x' - x$. We consider rectangles to be topologically open.

Definition 1 *An* **elastic rectangle** *$\mathcal{E}$ is a family of rectangles specified by a quintuplet (p, α, H, W, Q) where p is a point that is a corner of any rectangle in $\mathcal{E}$, α is the area of any rectangle in $\mathcal{E}$, H*

is the range of the height of the rectangles $[h^{\min}, h^{\max}]$*,* W *is the range of the width* $[w^{\min}, w^{\max}]$*, and* $Q \subseteq \{1,2,3,4\}$ *is a set of possible positions of* p *allowed in the family. The value of the position is 1 when* p *is a bottom left corner, 2 when* p *is a top left corner, 3 when* p *is a top right corner, and 4 when* p *is a bottom right corner.*

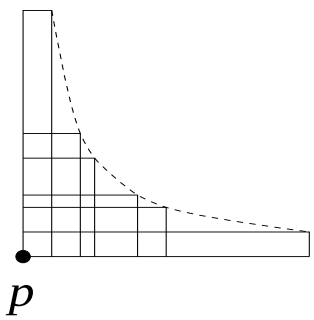

Figure 1: An elastic rectangle $\mathcal{E}$.

We use the notation $p(\mathcal{E})$, $\alpha(\mathcal{E})$, $H(\mathcal{E})$, $W(\mathcal{E})$, and $Q(\mathcal{E})$ for the parameters of an elastic rectangle $\mathcal{E}$. The point $p(\mathcal{E})$ will be called the *anchor* of $\mathcal{E}$.

A *realization* of an elastic rectangle $\mathcal{E}$, denoted E, is a single rectangle from the family—i.e. we must choose a valid height, width, and corner to place at $p(\mathcal{E})$. A realization of a set of elastic rectangles is called a *good realization* if the rectangles do not intersect pairwise (Figure 2).

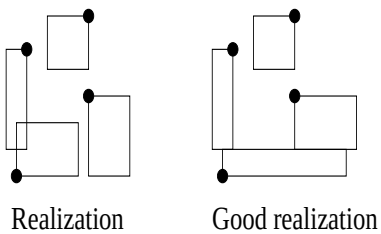

Figure 2: Realizations.

The *elastic labelling problem* is: Given a set of elastic rectangles, find a good realization. It is a generalization of the point-feature-label placement problem, and thus is NP-hard.

The special case when $|Q| = 1$ for each elastic rectangle—i.e. we have no choice about which corner to use— is called the *one-corner elastic labelling problem.* In the following subsection we show that this problem is still NP-hard.

2.1 One-corner elastic labelling problem

In this subsection we will prove the NP-hardness of the special case of the elastic labelling problem in which we fix the corner of each elastic rectangle that must be placed at the associated point, the *one-corner elastic labelling problem.* Thus, either elasticity, or the choice of which corner of the label to use, results in an NP-hard problem.

Theorem 1 *The one-corner elastic labelling problem is NP-hard.*

PROOF. Note that we are not claiming NP-completeness, because it is not clear that the problem is in NP.

We will reduce 3-SAT to the one-corner elastic labelling problem, following the idea of the proof given by Formann and Wagner [FWa91] for the NP-completeness of the point-feature-label placement problem.

Given an instance of 3-SAT, we will construct an instance of the one-corner elastic labelling problem, with gadgets for the variables and clauses, and with "pipes" joining them, in such a way that the 3-SAT formula is satisfiable iff the set of elastic rectangles has a good realization.

The basic building block is a *toggle*, as shown in Figure 3. Point q is a dummy point, with an associated 0×0 rectangle. The elastic rectangle associated with point p has area t, height range $[1, t]$, and width range $[1, t]$. The presence of point q forces us to use one of two rectangles for point p, either $1 \times t$, or $t \times 1$.

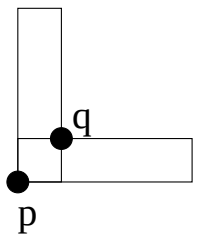

Figure 3: Basic building block.

Toggles can be joined to form horizontal and vertical pipes as shown in Figure 4. We consider these pipes to be directed, from right to left, and from bottom to top, respectively. Observe that if the first toggle in a pipe is realized (or "set") perpendicular to the pipe, then all the toggles in the pipe must also be set perpendicular to the pipe. In this case we will say that there is "flow" in the pipe. (Note that we can use larger values of t to "stretch" some of the toggles in a pipe to align things nicely.)

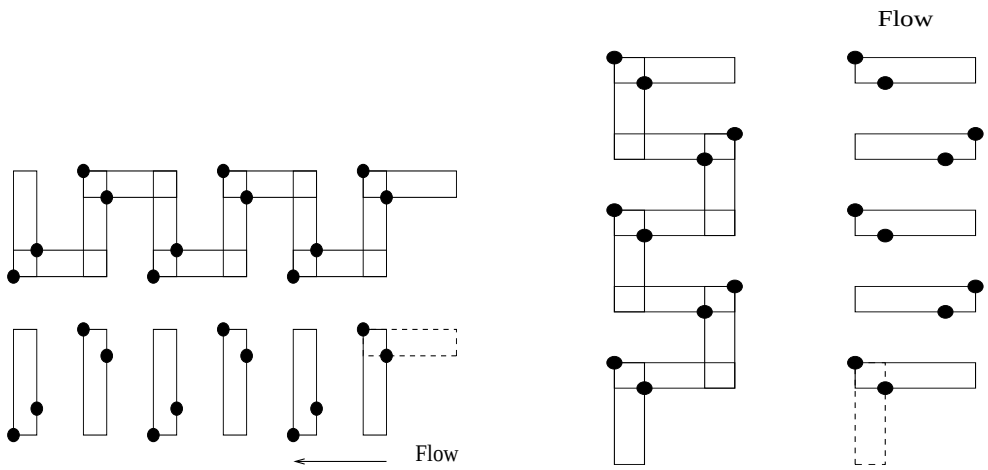

(a) Horizontal pipe.

(b) Vertical pipe.

Figure 4: Pipes.

For each variable x, construct two overlapping toggles connected to two horizontal pipes, labelled p_x and $p_{\bar{x}}$, as shown in Figure 5. Observe that there can be flow in at most one of the pipes. Setting variable x True [False] will correspond to having flow in pipe p_x [$p_{\bar{x}}$, respectively].

For each clause, construct an elastic rectangle with three realizations, connected to three vertical pipes as shown in Figure 6. The three vertical pipes will correspond to the three literals in the clause. Observe that there must be flow in at least one of the three vertical pipes.

The over-all structure of the instance of the one-corner labelling problem is shown in Figure 7. The variables are lined up on the left, with two horizontal pipes for each one. The clauses are lined up on the bottom, with three vertical pipes for each one. Each vertical pipe corresponds to some literal in some clause, and must be joined with the horizontal pipe for that literal. The connection is shown in Figure 8. Observe that if there is flow in the vertical pipe, then there must be flow in the horizontal pipe.

The one thing we still need is a crossing gadget that allows a vertical pipe to cross a horizontal pipe without disturbing flow in either one. Supposing we have such a crossing gadget, let us prove that the 3-SAT formula is satisfiable iff the set of elastic rectangles has a good realization: If the 3-SAT formula is satisfiable, then choose the realization that has flow in all horizontal and vertical pipes corresponding to true literals. For the remaining pipes, set all the toggles parallel to the pipe (no flow). For each variable, only one of the two horizontal pipes has flow, so there is a good realization for the two toggles corresponding to the variable. For each clause, at least one of the vertical pipes has flow, so there is a good realization for the elastic rectangle corresponding to the clause. Thus there is

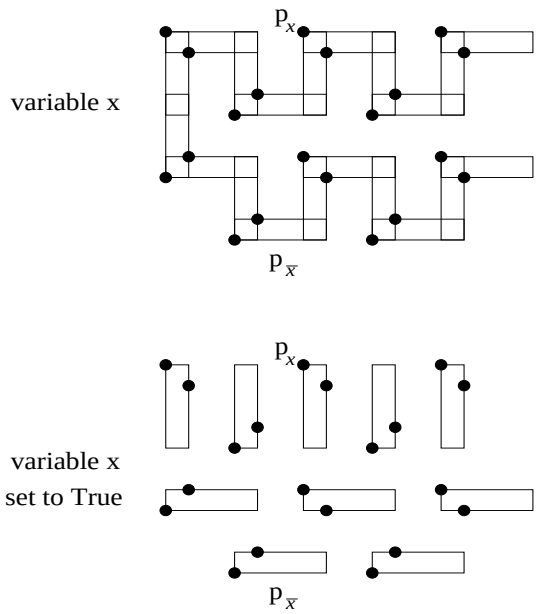

Figure 5: Variable setting.

a good realization for the whole set of elastic rectangles. Conversely, if there is a good realization for the elastic rectangles, then set variable x to True if there is flow in horizontal pipe p_x, and set variable x to False otherwise. Since at least one of the vertical pipes leaving each clause gadget has flow in it, and this flow is preserved when the vertical pipe joins the horizontal pipe for that literal, thus this truth-value setting satisfies all the clauses.

It remains to describe the crossing gadget. The horizontal pipe is unchanged, except that one toggle is stretched. In order for the vertical pipe to cross the horizontal one, some toggle of the vertical pipe must intersect some toggle of the horizontal pipe. This causes trouble when we would like to use the intersecting realizations for the two intersecting toggles. The fix is to put in a detour on the vertical pipe, with one branch of the vertical pipe intersecting a vertical realization of a toggle from the horizontal pipe, and the other branch of the vertical pipe intersecting a horizontal realization of a toggle from the horizontal pipe. Since the horizontal pipe will either use vertical realizations or horizontal realizations, thus one of the two branches of the vertical pipe will be available to transmit flow. See Figure 11. We must also provide an alternate, third realization for each of the toggles of the vertical pipe that intersect toggles of the horizontal pipe. These are toggles B and D in Figure 11. The rectangles with anchors U,W,Y and Z have zero width and height.

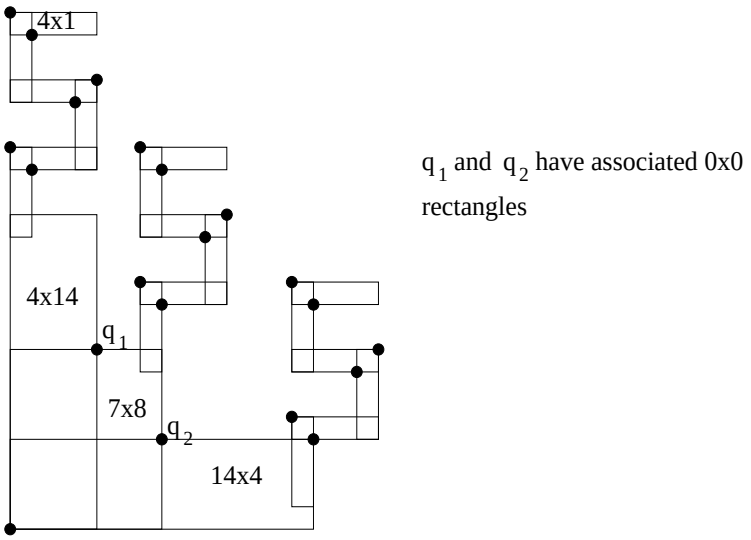

Figure 6: Clause gadget.

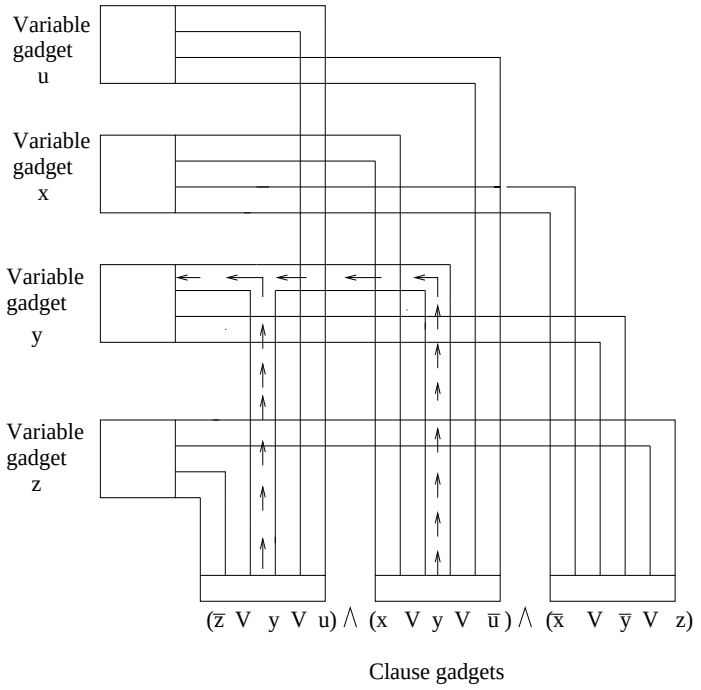

Figure 7: Layout of variable, clause, and pipe gadgets.

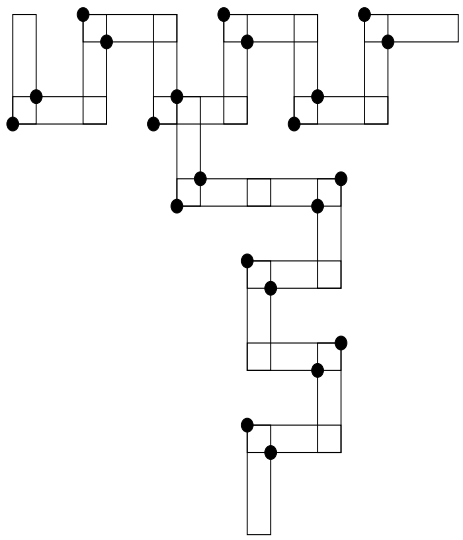

Figure 8: Connection between pipes.

Lemma 1 *Referring to Figure 11, if toggle C is set to horizontal, then toggle A must be set to horizontal.*

PROOF. Consider the two settings for toggle T. If T is set to horizontal, then B cannot be set to vertical or square, so it must be set to horizontal, so A must be set to horizontal (Figure 12). On the other hand, if T is set to vertical, then D cannot be set to vertical or square, so it must be set to horizontal, so A must be set to horizontal (Figure 13). □

This lemma shows that the vertical pipe preserves flow. It remains to observe that there are good realizations corresponding to all four possibilities of flow/no flow in each of the two pipes. See Figures 12, 13, 14, and 15.

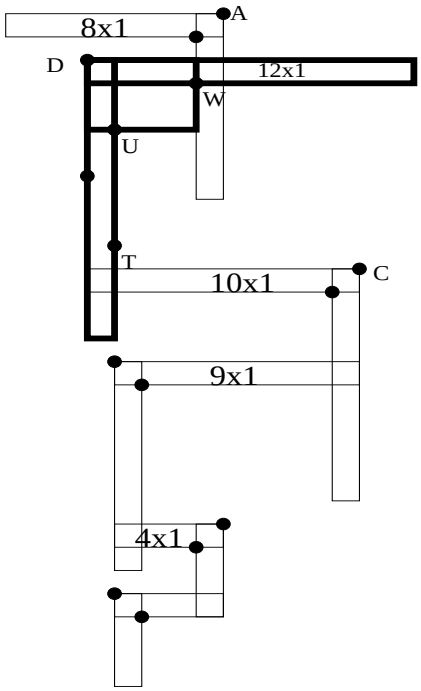

Figure 9: Vertical part of the crossing gadget.

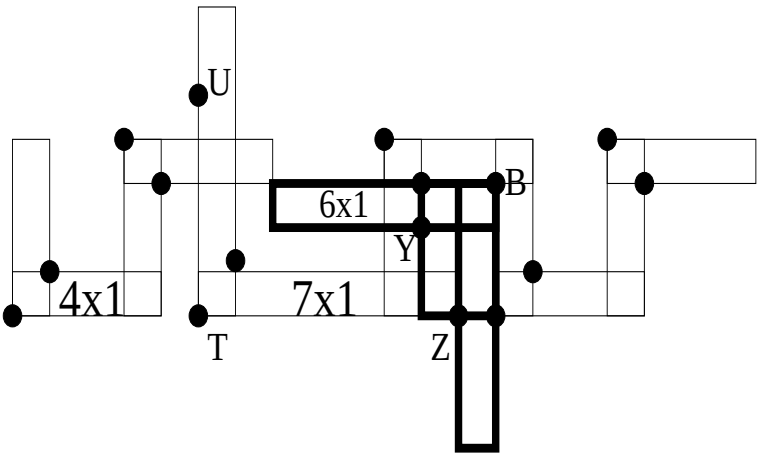

Figure 10: Horizontal part of the crossing gadget.

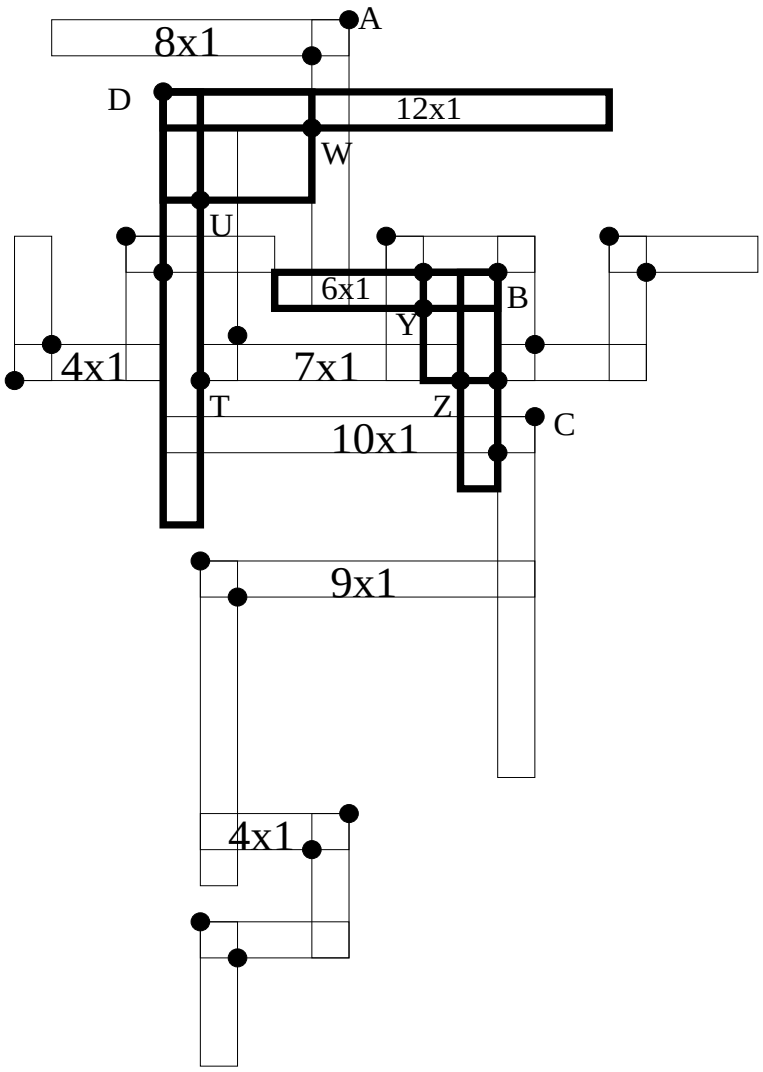

Figure 11: Crossing gadget.

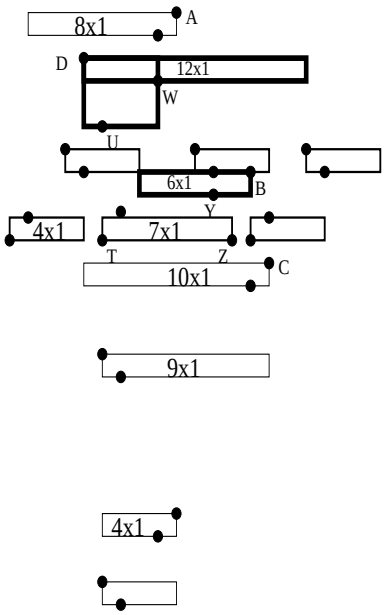

Figure 12: Having just vertical flow.

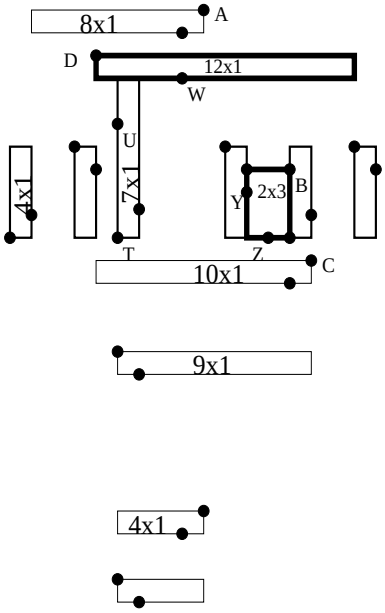

Figure 13: Having both vertical and horizontal flow.

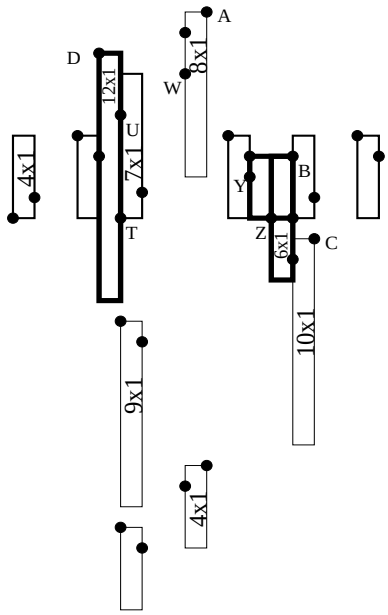

Figure 14: Having just horizontal flow.

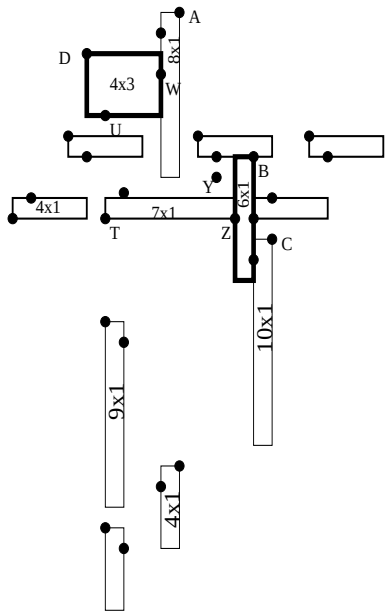

Figure 15: Having neither vertical nor horizontal flow.

3 Sliding labels problem

The sliding labels problem is a traditional labeling problem in the sense that the labels are of fixed sizes (not necessarily all of the same size) and we have to position them so that they do not overlap. In this problem we are given a set of points in the plane, each point associated with an orthogonal rectangle. The problem is to place the rectangles such that their associated points are on their boundary and the rectangles are pairwise disjoint.

If we restrict the associated point to be just in any part of the left or right side of the boundary of its rectangle we have the *left-right sliding labels problem.* In the following subsection we prove that even the left-right sliding labels problem is NP-hard. Again this proof follows the same strategy given by Formann and Wagner [FWa91].

3.1 Left-right sliding labels problem

We will use notation similar to that of section 2. Rectangles are considered to be topologically open. The point associated with a rectangle is called its *anchor.* A *good realization* for a set of rectangles is a placement of the rectangles at their anchors such that the rectangles are pairwise disjoint. As for the one-corner labelling problem we reduce an instance of the 3-SAT problem to an instance of the left-right labelling problem. We build variable, clause and crossing gadgets, and pipes. The overall structure is exactly the same as before, just details of the gadgets change.

In the figures for this section we indicate by an arrow the anchor of a rectangle. We say a rectangle is *standard* when it has width and height equal to 2.

A *pipe* for this instance is a set of points in the plane associated with either standard rectangles or with rectangles of zero width and height. We call the anchors with rectangles of zero width and height *dummy points.* As before we introduce two kind of pipes: horizontal and vertical.

The basic building block for a *horizontal pipe* consists of a point A associated with a standard rectangle and four dummy points as illustrated in Figure 16.a. The dummy points guarantee that the rectangle for A can only be in two possible positions, to the right of A, with A in the middle of the left side, or to the left of A, with A in the middle of the right side. We put several basic building blocks together to form a horizontal pipe. A horizontal pipe is directed from right to left. Note that if the first rectangle in the pipe is to the left of its anchor, then all the rectangles in the pipe are to the left of their anchors. In this case, we say that there is *flow* in the pipe (Figure 17.a).

The basic building block for a *vertical pipe* is illustrated in Figure 16.b, where point B is associated with a standard rectangle and the other points are dummy points. The dummy points guarantee that the rectangle for B must be to the right of B. We put several of these basic building blocks together to form a vertical pipe. A vertical pipe is directed from the bottom to the top. Note that if the first rectangle of the pipe has its anchor as bottom corner then all the rectangles above must have their

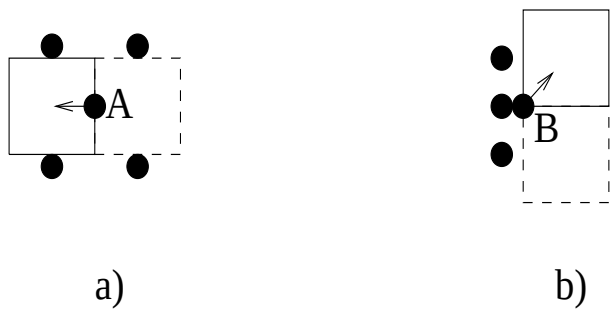

Figure 16: Basic blocks.

anchors as bottom corners. In this case, we say that there is *flow* in the pipe (Figure 17). Note that, unlike horizontal pipes, there is no unique "no flow" position.

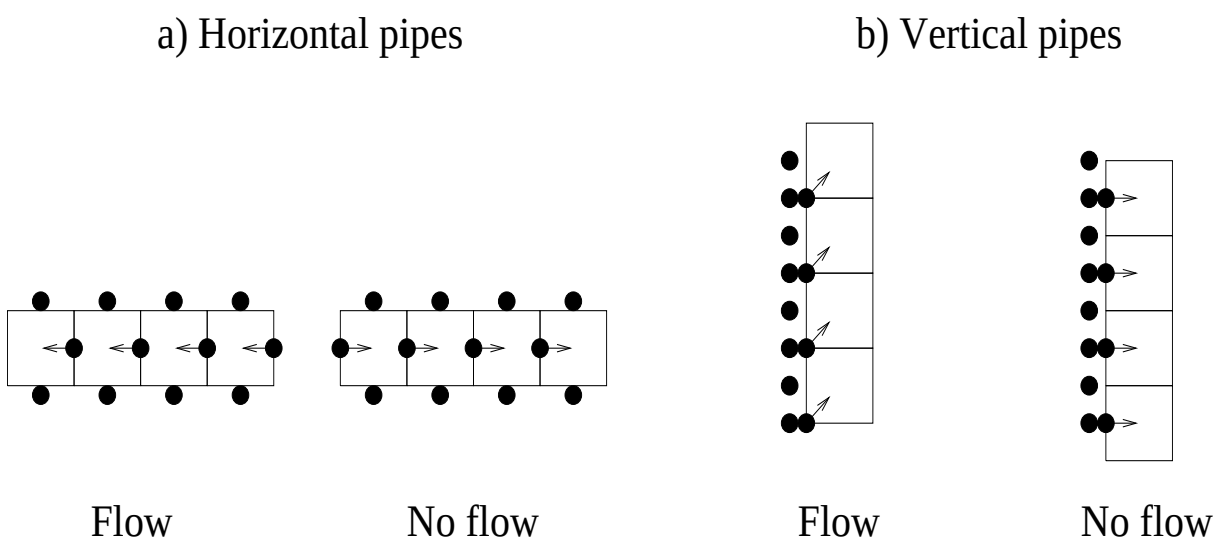

Figure 17: Pipes.

For each variable x of a 3-CNF formula we build a *variable gadget* shown in Figure 18. This gadget consists of a point associated with a rectangle of width 3 and height 8, dummy points, and two horizontal pipes. We call the horizontal pipe at the top of the variable gadget p_x and the one at the bottom $p_{\bar{x}}$. Observe that there can be flow in at most one of the pipes. Setting variable x True [False] will correspond to having flow in pipe p_x [$p_{\bar{x}}$, respectively].

For each clause we have a *clause gadget*, which consists of a point A associated with a rectangle of height and width equal to 4, point E associated with a standard rectangle, and dummy points B,

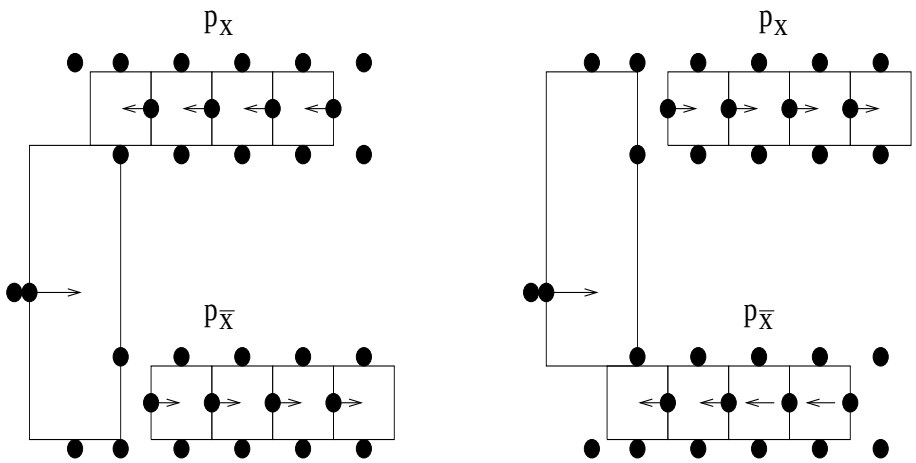

Figure 18: Variable gadget.

C, D,and F. Three vertical pipes, V_1, V_2, and V_3 are connected to the clause gadget as indicated in Figure 19. The dummy points force anchor A to be at the bottom right of its rectangle or on the left of its rectangle. In the former case there must be flow in pipe V_1. In the latter case, if anchor A is at the bottom left of its rectangle then there must be flow in pipe V_2 and otherwise the rectangle for E is forced to the right and there must be flow in pipe V_3.

We connect a vertical pipe with a horizontal pipe as indicated in Figure 21. Rectangle R has width 2 and height 3. Observe that if there is flow in the horizontal pipe to the right of R, or flow in the vertical pipe then R must be to the left of its anchor and there must be flow in the horizontal pipe to the left of R. On the other hand, there is a good realization with no flow in either pipe.

We also need crossing gadgets since we have vertical pipes crossing horizontal pipes of other variable gadgets. A *crossing gadget* consists of points A, B, and C. The rectangle associated with A has width equal to 1 and height equal to 4. Points B and C have rectangles with width equal to 2 and height of 1. We can easily see that if there is flow in the vertical pipe then A is forced to be a bottom anchor see Figures 22.a and 22.b. If A is bottom left corner then this rectangle forces flow in the part of the vertical pipe that continues above the crossing. If A is a bottom right corner then B is forced to be at the left side of its rectangle. Then the rectangle at B forces flow to continue being transmitted into the vertical pipe above the crossing. When there is flow into the horizontal pipe then the rectangle at A is forced to have A at its right side, thus flow continues in the horizontal pipe to the left of the crossing with the vertical pipe. This case is illustrated in Figures 22.b and 22.d. In Figure 22.c we can see that if there is no flow transmitted by either the vertical or the horizontal pipe then no flow is forced to be transmitted after the crossing.

Finally, we build for an instance of a 3-SAT problem an instance of the left-right sliding labels problem in the same way as the one-corner labelling problem instance as shown in Figure 7. We just

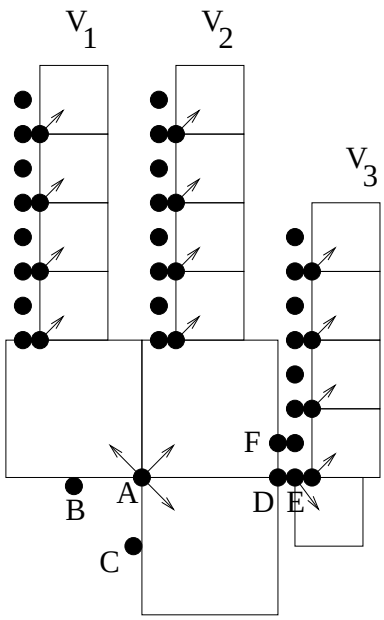

Figure 19: Clause gadget.

use the gadgets and pipes for the left-right label problem. The proof for the following theorem is similar to the proof of Theorem 1.

Theorem 2 *An instance of 3-SAT problem has a solution iff the instance of the left-right sliding labels problem as constructed above has a solution.*

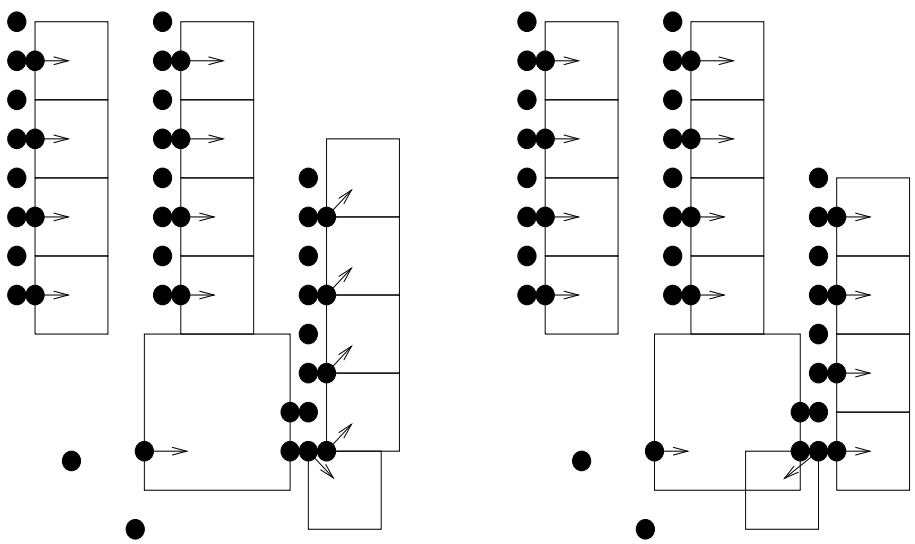

Figure 20: Clause gadget forcing flow into pipe V_3.

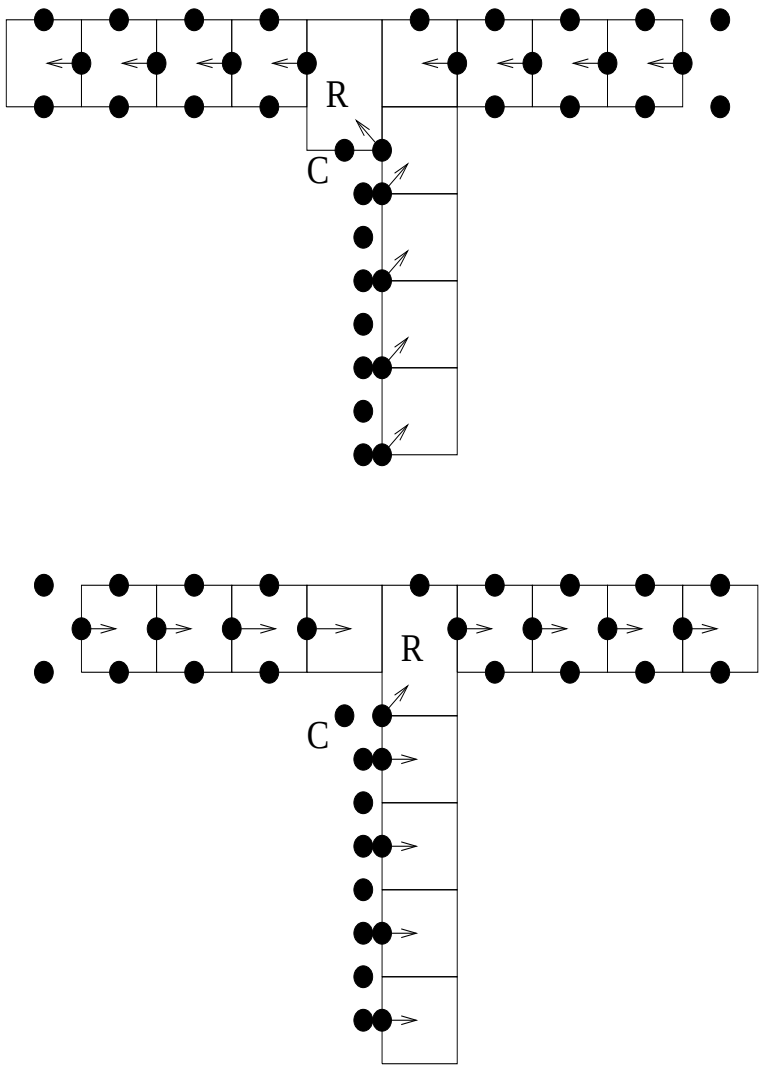

Figure 21: Connection of pipes.

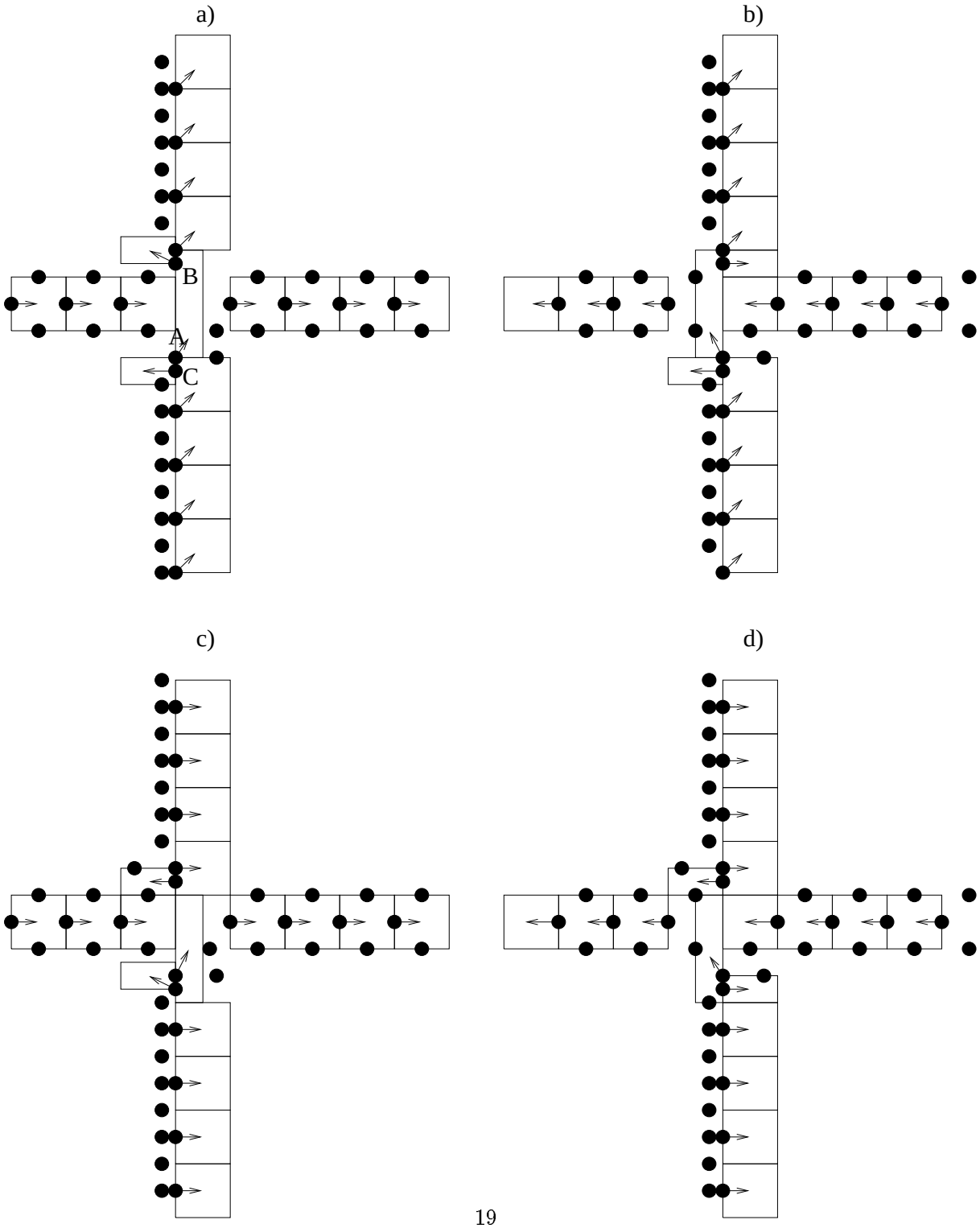

Figure 22: Crossing gadget.

References

[CMS95] J. Christensen, J. Marks, and S. Shieber. An empirical study of algorithms for point feature label placement. *ACM Transactions on Graphics.* (1995) 14 (3): 203-232.

[DFr92] J.S. Doerschler and H. Freeman. A rule-based system for dense-map name placement. *Communications of the Association of Computing Machinery.* (1992) 35(1), 68-79.

[FWa91] M. Formann and F. Wagner. A packing problem with applications in lettering of maps. *Proceedings of the 7th ACM Symposium on Computational Geometry.* (1991) 281-288.

[Imh75] E. Imhof. Positioning names on maps. *The American Cartographer.* (1975) 2, 128-144.

[ILu97] C. Iturriaga and A. Lubiw. Elastic labels: the two-axis case. *Proceedings of the Graph Drawing '97, Lecture Notes in Computer Science* 1353, Springer. Rome, Italy, September 1997.

[KIm88] T. Kato and H. Imai. The NP-completeness of the character placement problem of 2 or 3 degrees of freedom. *Record of Joint Conference of Electrical and Electronic engineers in Kyushu.* (1988), 1138. In Japanese.

[KRa92] D. Knuth and A. Raghunathan. The problem of compatible representatives. *SIAM Disc. Math.* (1992) 5 (3) 422-427.

[MSh91] J. Marks and S. Shieber. The computational complexity of cartographic label placement. *Technical Report CRCT-05-91.* Harvard University (1991).

[WWo97] F. Wagner and A. Wolff. A practical map labeling algorithm. *Computational Geometry: Theory and Applications.* (1997) 387-404.

[Yoe72] P. Yoeli. The logic of automated map lettering. *The Cartographic Journal.* (1972) 9, 99-108.